EXAMINATION NUMBER.....

MBEZIBWA THE GREAT ACADEMIC PLATFORM

MTGAP BRELA-REGI. NO. **613055.**

Mbezibwaemmanuel2@gmail.com

mbezip@gmail.com

CONTACTS

0758764778, 0758723120, 0750208434, 0678474807

MIPANGO STREET,DODOMA –TANZANIA

STANDARD VII-SPECIAL FOR SOUTHERN ZONE.

(LINDI, MTWARA AND RUVUMA)

MATHEMATICS-02

Time: **1: 40** HRS Monday **20th** -APRIL, **2026.**

Instructions

1. This paper consists of sections A, B and C with a total of Six (8) questions.
2. Answer all questions in the spaces provided.
3. Section A and B carry twenty (**20**) marks each and section C carries ten (10) marks.
4. All writings must be in black or blue pen, except drawing which must be in a pencil.
5. Communication devices and any unauthorized materials are not allowed in the examination room.
6. Write your Examination Number and all-important information at the top right corner of every page.

FOR EXAMINER'S USE ONLY		
QUESTION NUMBER	SCORE	EXAMINER'S INITIAL
1.		
2.		
3.		
4.		
5.		
6.		
TOTAL		
CHECKER'S SIGNATURE		

EXAMINATION NUMBER……

SECTION A: MATHEMATICAL OPERATIONS (10 MARKS)

For each of the following questions 1- 8, work out the answer, then write the answer correctly in the space provided.

S/N	QUESTION	WORKING SPACE	ANSWER
1	i. 9090 + 5058 =		
	ii. 4126 – 256 + 85 =		
	iii. 963 x 37 =		
	iv. 22489 ÷ 43 =		
	v. 875.3 – 20.785 =		
	vi. 2.93 x 1.6 =		
	vii.2.17 ÷ 0.07 =		

	viii. $11\frac{3}{5} + 2\frac{1}{4} =$		
	ix. $4\frac{3}{7} - 5\frac{1}{3} =$		
	x. $4\frac{11}{12} \div 2\frac{7}{12} =$		
SECTION B: WORD PROBLEMS (30 MARKS)			
2.	i. What is the total of the total value of 4 and 3 in the number 1,145,321?		
	ii. The bell rang together at 4:30 pm, bell **A** rings after every 12 minutes and bell **B** after every 18 minutes. At what time will these bells rings together?		
	iii. John bought two radio radios for sh.1, 720,000/= and sold both at a profit of 40 percent. How much did he sell the radio?		
	iv. A man spends three fifth of his monthly salary, only to be left with 24000. Find the amount of his salary		

	v. Two third of a certain number is 36. Find a half of the number?		
	vi. The mathematics teacher bought 80 sweets for pupils of his class. If he gave 6 sweets to each pupil, write the mathematical expression for the sweets that remained?		
3.	i. The speed of the car is 80 kilometres per hour. If it left from one town at 8:30 a.m. towards the next town, at what time will the car arrived at its destination given the distance is 120 Km?		
	ii. One pipe can fill a pool 1.25 times as fast as a second pipe. When both pipes opened, they fill the pool in 5 hours. How long would it take to fill the pool if only the slower pipe is used?		
	iii. One person walks a 25km stretch in 4 hours. What time will 10 people spend to walk the same distance if each person has the same speed as the previous person?		
4.	i. Shakazulu did five tests as a preparation for his final examination and scored the average of 63 marks. If the scores for tests were 48, 54, 78 and 60, what was the score of the fifth test?		

	ii. A 6m steel rod weighs 15kg. How long will the steel rod weighing 100 kg be?		
	iii. Jane is eight years older than Upendo. If the sum of their age is 20, what will be the age of Jane in five years to come?		
5.	i. Fatuma's school is 5km from her home. If she goes to school every day, what distance will she travel in 400 days?		
	ii. Machame's bus takes 15 minutes to travel a distance of 20km. Express Machame's speed in Km/h		
	iii. The average weekly production of blocks for one person was 185. In a period of 4 weeks, 111,000 blocks produced. How many people were there to do the job?		
6.	i. Debora bought a vest at an auction for sh. 2400, if the value of the vest is Sh. 3000. What a percentage discount did she receive?		

ii. A girl bough one kilogram of tomatoes. One fifth of it was green, another three fifth was red and rest spoilt. How many grams of the tomatoes were spoilt?

iii. Michael deposited his money in bank. He got an interest of sh. 30,000 after two years. If the bank rate is 15% per year, find the money he deposited in the bank.

SECTION C: STATISTICS AND GEOMETRY FIGURES (10 MARKS)

7. The following pie chart shows activities done by a certain man in a day. He works for 8 hours, Sleeps for 7 hours and the remaining time, he rest,

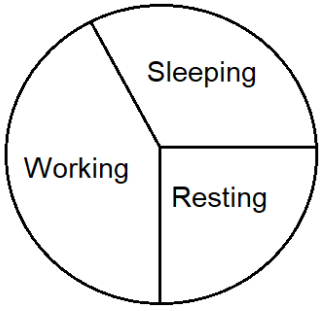

i. How many degrees would represent the time for resting?

ii. The following graph shows the amount of the rainfall recorded at Bunda station from Monday to Thursday.

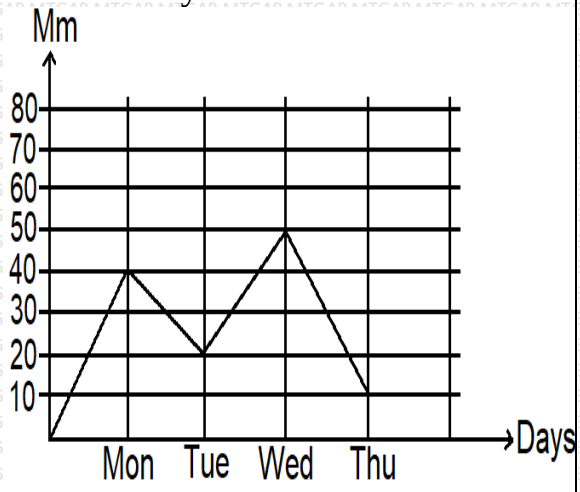

What is the average amount of rainfall

iii. Find the surface area of the following closed cone. (Use π=3.14)

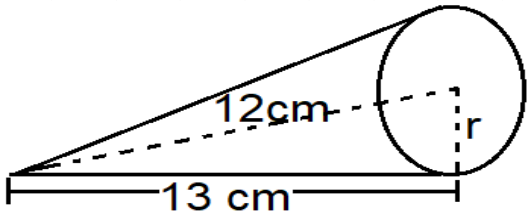

EXAMINATION NUMBER.....

8. i. Study the following figure carefully then find its area, Mind that Standard Unit s for the whole figure is homogeneous which is "**m**"

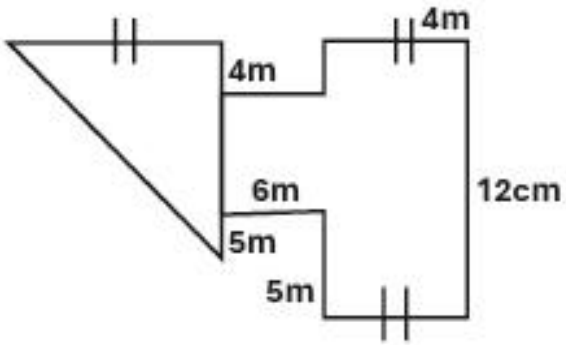

ii. Find the value of X in the following figure

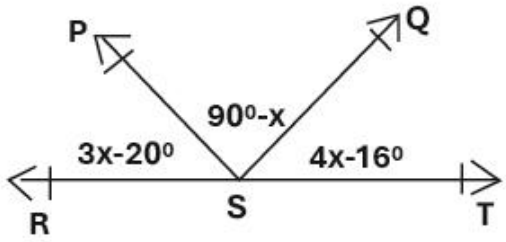

EXAMINATION NUMBER.....

TO ALL TEACHERS AND EDUCATION STAKEHOLDERS

Mbezibwa The Great Academic Platform (MTGAP) is a platform registered with the Government of Tanzania under BRELA registration number 613055 and fully licensed to carry out education related activities in Tanzania ,including holding the required operational licenses.

The Platform is mainly focused on the preparation and development of examinations and the writing of Academic Project proposal and non academic project propal, Academic books for primary and secondary schools in Tanzania.These materials are designed to serve as supplimentary and refference books for learning.

In additional MTGAP is also engaged in production of religious books storrybooks,and professional development books for workers in both formal and informal sectors in Tanzania.
We hereby invite all Education stakeholders across Tanzania.We prepare all types of Examination classes under both the Revised curriculum and the Former curriculum both Swahili and English as mode of communication.

Our services are affordable and cost-friendly, with the aim of improving Academic performance and supporting schools that collaborate with us.

We prepare the following examinations;

- Standard 4 and 7 Examination
- Weekly tests
- Mid term Examinations
- Terminal Examinations
- Joint Examination
- Ward Mock Examinations
- District Mock Examinations
- Regional Mock Examinations
- Zonal Mock Examinations
- Pre national Examinations
- Annual Examinations.

Call us today to press your order.

We are located in Dodoma City near the Collage of Institute of Rural Development.For Inquiries contact The CEO Mbezibwa The Great Academic Platform Phone +255 758-723-120,+255 758-764-778,+255 750 208-434, +255 673-788-679 (WASAP NO +255 712-393-104,+255 758 764-778) Email mbezibwaemmanuel2@gmail.com

Payment information; All Payments should be made via Vodacom LIPA NUMBER 3665538I Account Name Mbezibwa The Great.